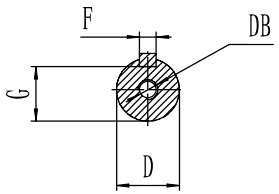

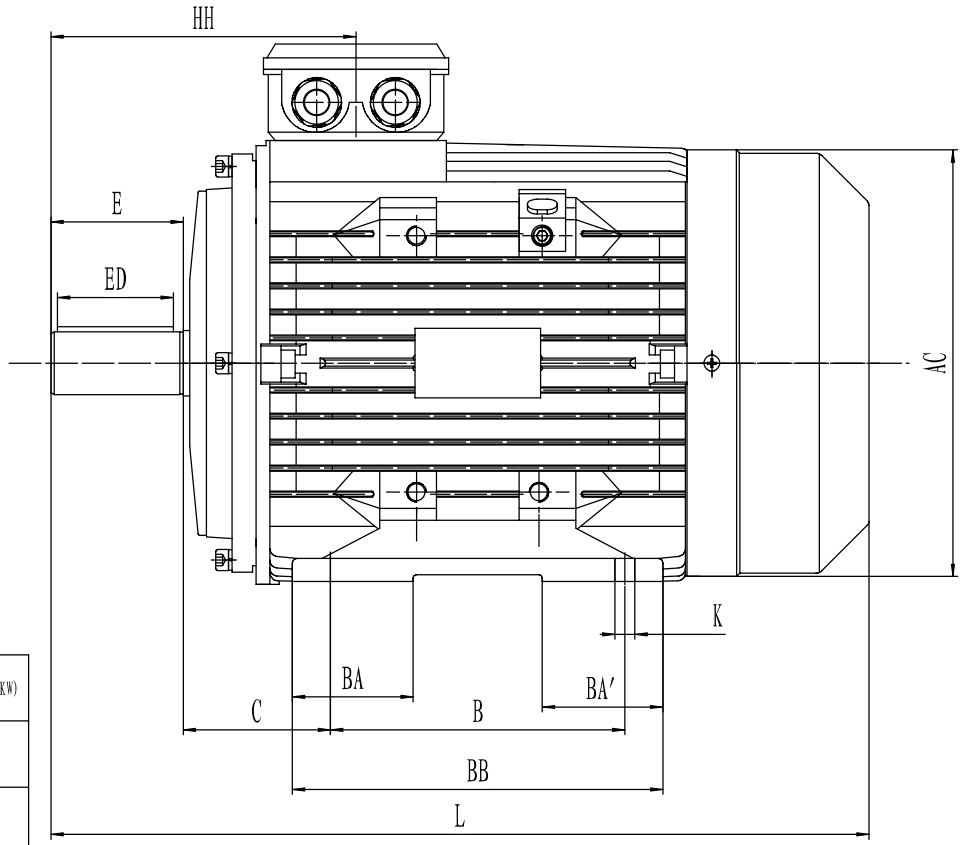

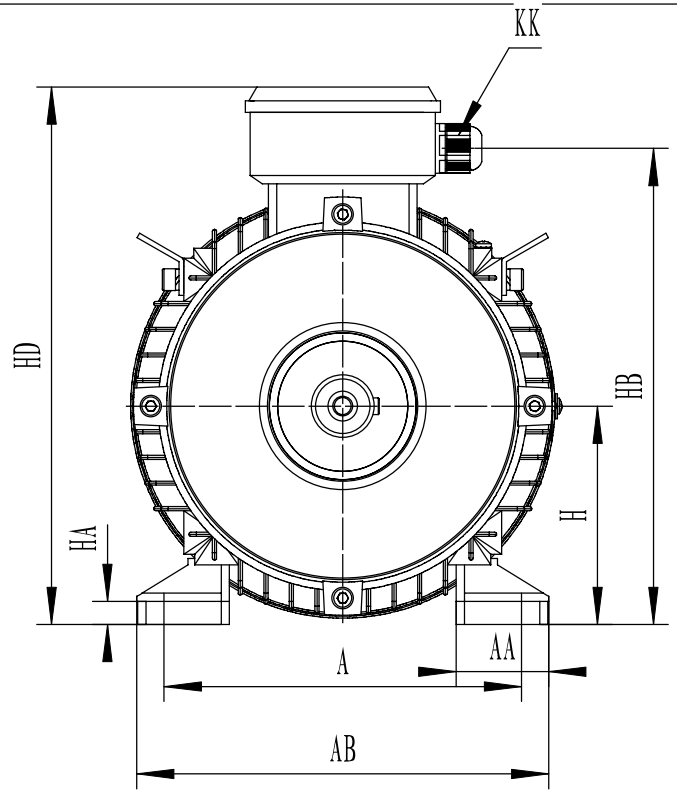

CLIENT:		
	KW	RPM
FRAME	132L	
VOLTS		

FRAME	POIWER (KW)
HMS132L1-2	7.5
HMS132L1-4	5.5

FOOT-OR-FLANGE-MOUNTING																					SHAFT EXT.DE ONLY						WEIGHT(kg)									
A	AA	AB	AC	B	BA	BA"	BB	C	H	HA	HB	HD	HH	K	KK	L					D	DB	E	ED	F	G										
216	36	252	270	178(132L)	51	51	212	89	132	14	291.5	325	184.5	12X16	2-M25X1.5	494.5(132L)					38	M12X28	80	70	10	33										

CUSTOMER APPROVAL

SIGNATURE

DATE

HMS132L B3	DATE			CHECKED BY	
	DESIGNED BY			APPROVED BY	
DIMENSION OUTLINE	ISSUE		DATE	CERTIFIED BY	
	ISSUE		DATE	CERTIFIED BY	
DWG #	ISSUE		DATE	CERTIFIED BY	
	ISSUE		DATE	CERTIFIED BY	